CHEBOYGAN COUNTY ZONING BOARD OF APPEALS

870 SOUTH MAIN ST. ▪ PO BOX 70 ▪ CHEBOYGAN, MI 49721
PHONE: (231)627-8489 ▪ FAX: (231)627-3646

CHEBOYGAN COUNTY ZONING BOARD OF APPEALS MEETING & PUBLIC HEARING
WEDNESDAY, NOVEMBER 27, 2019 AT 7:00 P.M.
ROOM 135 – COMMISSIONERS ROOM
CHEBOYGAN COUNTY BUILDING, 870 S. MAIN ST., CHEBOYGAN, MI 49721

AGENDA

CALL TO ORDER

PLEDGE OF ALLEGIANCE

APPROVAL OF AGENDA

APPROVAL OF MINUTES

PUBLIC HEARING AND ACTION ON REQUESTS

1. Omega Electric and Sign Company/Burt Lake Marina – Requests a variance from section 17.19.8 of the Zoning Ordinance that indicates the maximum sign surface area is 80 sq.-ft. for freestanding signs in the Commercial Development (D-CM) zoning districts. The applicant proposes replacing the current freestanding sign with a new freestanding sign with 98 sq.-ft. of sign surface area. The property is zoned Commercial Development (D-CM) and located at 4879 S. Straits Hwy. in Tuscarora Township; Parcel No. 161-I39-000-037-00; Section 25.

UNFINISHED BUSINESS

1. Discussion regarding Final Rules of Procedure.

NEW BUSINESS

ZBA COMMENTS

PUBLIC COMMENTS

ADJOURN

CHEBOYGAN COUNTY ZONING BOARD OF APPEALS MEETING & PUBLIC HEARING
WEDNESDAY, OCTOBER 23, 2019 AT 7:00PM
ROOM 135 – COMMISSIONER'S ROOM - CHEBOYGAN COUNTY BUILDING

Members Present: Charles Freese, Ralph Hemmer, John Moore, John Thompson

Members Absent: Nini Sherwood

Others Present: Michael Turisk, David Hansen, James Caldwell, Carl Muscott, Kaylin Caldwell, Cal Gouine, C. Maziasz, Braeden Richey

The meeting was called to order by Chairperson Freese at 7:00pm.

PLEDGE OF ALLEGIANCE
Chairperson Freese led the Pledge of Allegiance.

APPROVAL OF AGENDA
The agenda was presented. **Motion** by Mr. Moore, seconded by Mr. Hemmer, to accept the agenda as presented. Motion carried. 4 Ayes, 0 Nays, 1 Absent (Sherwood)

APPROVAL OF MINUTES
Minutes from the September 25, 2019 Zoning Board of Appeals meeting were presented. Mr. Freese referred to the first paragraph on page 4 and stated that the second sentence is to be revised to "Mr. Freese stated that this sentence is to be revised to "4.7 Meeting Attendance. Each regular member of the ZBA shall attend all regular and special meetings of the ZBA, unless excused by the Chairperson for good cause. Two (2) unexcused absences, consecutive or nonconsecutive, by a regular member of the ZBA can serve as a basis for removal from the Zoning Board of Appeals by the Cheboygan County Board of Commissioners following notice and a hearing." **Motion** by Mr. Moore, seconded by Mr. Hemmer, to approve the minutes as amended. Motion carried. 4 Ayes, 0 Nays, 1 Absent (Sherwood)

PUBLIC HEARING & ACTION ON REQUESTS
David Hansen/James and Kaylin Caldwell – Requests a 3 ft. 8 in. side setback variance for construction of an addition to a single family dwelling in a Lake and Stream Protection (P-LS) zoning district (where an 8 ft. side setback is required). The property is located at 8991 N. Canal Dr. in Benton Township; Parcel No. 105-L29-000-028-00; Sections 18 and 19.

Mr. Turisk reviewed the information included in the staff report.

Mr. Freese discussed with Mr. Hansen the required setbacks from the well, property lines, storm drains, drainage ditches and culverts, existing and proposed dwelling structures and their impact on the drainfield. Mr. Freese pointed out that if District Health Department #4 considers the proposed two offices as bedrooms then there would not be enough area available for the necessary drainfield. He also pointed out that would also be the case if the soil conditions required as much as 500sf per bedroom.

Mr. Freese asked for public comments. There were no public comments. Public comment closed.

The Zoning Board of Appeals added the following to the General Findings:

1. The applicant proposes an addition to the existing dwelling that would bring the total number of bedrooms to 4 plus 2 offices.
2. The proposed drainfield measures 44ft. 2in. north to south in length and 42ft. 8in. east to west in width for a total of 1799 sf in area.
3. The total square footage required per bedroom for a drainfield in the location ranges from 350sf to 400sf according to District Health Department #4.
4. A four bedroom house would require a 1600sf drainfield assuming soil conditions mandate the larger square footing figure.
5. Decreasing the north to south length of the drainfield by 3ft. 8in. would reduce the proposed drainfield size by 156.4sf to a total size of 1642.6sf.
6. Four bedrooms at 400sf of drainfield per bedroom requires a 1600sf field which is less than the proposed drainfield after being reduced in length by 3ft. 8in.
7. A shift of the proposed addition 3ft. 8in. north would allow construction without a variance being necessary.
8. District Health Department #4 requires 25ft between a storm drain and the edge of the proposed field.

9. The proposed field as diagrammed is 18ft. from a storm drain which is located to the immediate east of the house.
10. 10ft. is required between the edge of the field and the new construction.

The Zoning Board of Appeals revised and approved the Findings of Fact and the Specific Findings of Fact under Section 23.5.4. **Motion** by Mr. Moore, seconded by Mr. Freese, to approve the variance request based on the General Findings and the Specific Findings of Fact under Section 23.5.4 conditioned on District Health Department #4 requiring over 1642.6sf of drainfield for the dwelling including the additional new construction. Motion carried. 4 Ayes, 0 Nays, 1 Absent (Sherwood)

UNFINISHED BUSINESS

Continuing Discussion Regarding Draft Rules Of Procedures

Mr. Freese stated that section 4.7 was corrected with the amendment to the minutes. **Motion** by Mr. Freese, seconded by Mr. Moore, to approve the amended Rules of Procedures. Motion carried. 4 Ayes, 0 Nays, 1 Absent (Sherwood) Discussion was held regarding the Rules of Procedure being reviewed by legal counsel.

NEW BUSINESS

No comments.

ZBA COMMENTS

No comments.

PUBLIC COMMENTS

Mr. Muscott asked what will happen if the applicants drainfield is over 1799sf. Mr. Freese stated that the applicant will have to justify what he has. Mr. Muscott stated he would have paid for the septic permit to know what would be allowed.

Mr. Muscott stated that one section of the Rules of Procedure refers to a 15 minute maximum time allowed for public comment. Mr. Muscott stated that limiting the total time for public comment is not allowed. Mr. Muscott noted that the Zoning Board of Appeals can allow 3 minutes or 5 minutes per person. Mr. Muscott stated that this section should be removed. Mr. Freese suggested changing this wording to what is included in the Planning Commission's Rules of Procedures. Mr. Freese stated that this allows the chairperson to limit based on the number of people and the time available. Mr. Muscott stated that the public act allows two alternate members for the Zoning Board of Appeals. Mr. Freese stated that this has been discussed in the past. Mr. Freese explained that an alternate member would not be prepared for a meeting if a Zoning Board of Appeals members calls in the morning to say they are not able to attend the meeting. Discussion was held.

ADJOURN

Motion by Mr. Moore to adjourn. Motion carried. Meeting adjourned at 9:29pm.

_____

John Thompson, Secretary

CHEBOYGAN COUNTY
ZONING BOARD OF APPEALS

Omega Electric & Sign Company/Burt Lake Marina

Exhibit List

1. Cheboygan County Zoning Ordinance
2. Cheboygan County Master Plan
3. Variance Application (7 Pages)
4. Mailing List (4 Pages)
5. Staff Report (6 Pages)
6.
7.

Note: Zoning Board of Appeals members have exhibits 1 and 2.

CHEBOYGAN COUNTY
PLANNING & ZONING DEPT.
870 South Main St., PO Box 70
Cheboygan, MI 49721
(231) 627-8489 (Telephone)
(231) 627-3646 (Fax)

DIMENSIONAL VARIANCE APPLICATION

$110.00 APPLICATION FEE

RECEIPT #:	$110.00 7100
CASH/CHECK:	31212
ACTION /DATE:	

PLEASE PRINT

PROPERTY LOCATION

Address	City / Village	Township / Sec.	Zoning District
4879 S. Straits Hwy	Indian River	TU / 25	D-CM
Property Tax I.D. (Parcel) Number: 161-I39-000-037-00	Subdivision or Condo. Name / Plat or Lot No.: Lots 37, 53, 54, 55, 56 & 58		

APPLICANT

Name	Telephone	Fax	
Omega Electric + Sign Company	989-358-8243	989-358-8243	
Address	**City & State**	**Zip Code**	**E-Mail**
1109 Crittenden Ct.	Alpena MI	49707	omegaoffice7@gmail.com

OWNER (If different from applicant)

Name	Telephone	Fax
Burt Lake Marina		
Address	**City & State**	**Zip Code**
4879 S. Straits Hwy	Indian River MI	49749

Detailed directions to site, including nearest crossroad:

Quarter-mile South of intersection of M-68 West and Straits Hwy. (at Vivios). Located on west side of US-27 (Straits).

Please Note: All applicable questions must be answered completely. If additional space is needed, number and attach additional sheets.

I. Property Information

A. List all known deed restrictions: none

B. This property is ☐ unplatted, ☒ platted, ☐ will be platted. If platted, name of plat Indian River Heights #37, 54, 55, 53, 56

C. Present use of the property is: MARINA

D. A previous appeal has / has not (circle one) been made with respect to these premises in the last one (1) year. If a previous appeal, rezoning or special use permit application was made, state the date _____, nature of action requested _____, and the decision _____.

E. Attach a site plan drawn per the attached directions.

II. Detailed Request and Justification

1. State exactly what is intended to be done on, or with the property which necessitates a variance from the Zoning Ordinance.

Replace EXISTING Pylon Sign WITH Brand STANDARD Pylon Sign with 98 Square feet of display area.

2. A dimensional variance may be granted by the Zoning Board of Appeals only in cases where the applicant demonstrates in the official record of the public hearing that practical difficulty exists by showing all of the following. All variance decisions made by the Zoning Board of Appeals are based on the following five (5) standards of the Cheboygan County Zoning Ordinance. **Please explain how the request meets each standard.**

a. That the need for the requested variance is due to unique circumstances or physical conditions of the property involved, such as narrowness, shallowness, shape, water, or topography and is not due to the applicant's personal or economic difficulty.

The size of the property warrants the use of SIGNAGE WITH TEXT large enough to be effective to facilitate way finding and advertising to passing traffic.

b. That the need for the requested variance is not the result of actions of the property owner or previous property owners (self-created).

N/A

c. That strict compliance with regulations governing area, setback, frontage, height, bulk, density or other dimensional requirements will unreasonably prevent the property owner from using the property for a permitted purpose, or will render conformity with those regulations unnecessarily burdensome.

yes; BRP Dealers are required to follow brand Standards to maintain Platinum Dealer Status with BRP and maintain a streamlined Brand STANDARD as required By BRP.

d. That the requested variance is the minimum variance necessary to grant the applicant reasonable relief as well as to do substantial justice to other property owners in the district.

yes. the new Proposed sign is only 18 square feet more than the current ordinance.

e. That the requested variance will not cause an adverse impact on surrounding property, property values, or the use and enjoyment of property in the neighborhood or zoning district.

no adverse impact found; the new sign will look much nicer than the existing sign and will beautify the property

The Zoning Board of Appeals members will visit the site prior to the public hearing. Please clearly stake the corners of the proposed building or addition and the nearest property line. **Does the property owner give permission for County zoning officials to enter his or her property for inspection purposes?** ☒ Yes ☐ No

Owner's Signature Ty Lemaire **Date** 10/26/19

AFFADAVIT

The undersigned affirms that the information and plans submitted in this application are true and correct to the best of the undersigned's knowledge.

Applicant's Signature Ryan Jamison President **Date** 10/18/19

SITE PLAN INFORMATION **Please include the following on your site plan:**

1. Property Line dimensions and Property shape.
2. Front, Rear, & Side setback dimensions.
3. Location, shape & size of all existing & proposed buildings on property.
4. Location of all drives and parking areas.
5. Rivers, lakes, wetlands, or streams within 500 ft.
6. Parcels under separate ownership therein.
7. Road Right-Of-Way (ROW); access or utility easements.
8. The existing and intended use of the lot and structures.
9. Place North arrow in space provided.
10. Other essential zoning information.

Distance from property line to proposed structure:	**Zoning District:**	**North:**
Front: _____ Rear: _____ Side: _____ Side: _____	D-CM	

See Attached Drawings

Front Setback 25'
Rear & Side Setback 10'

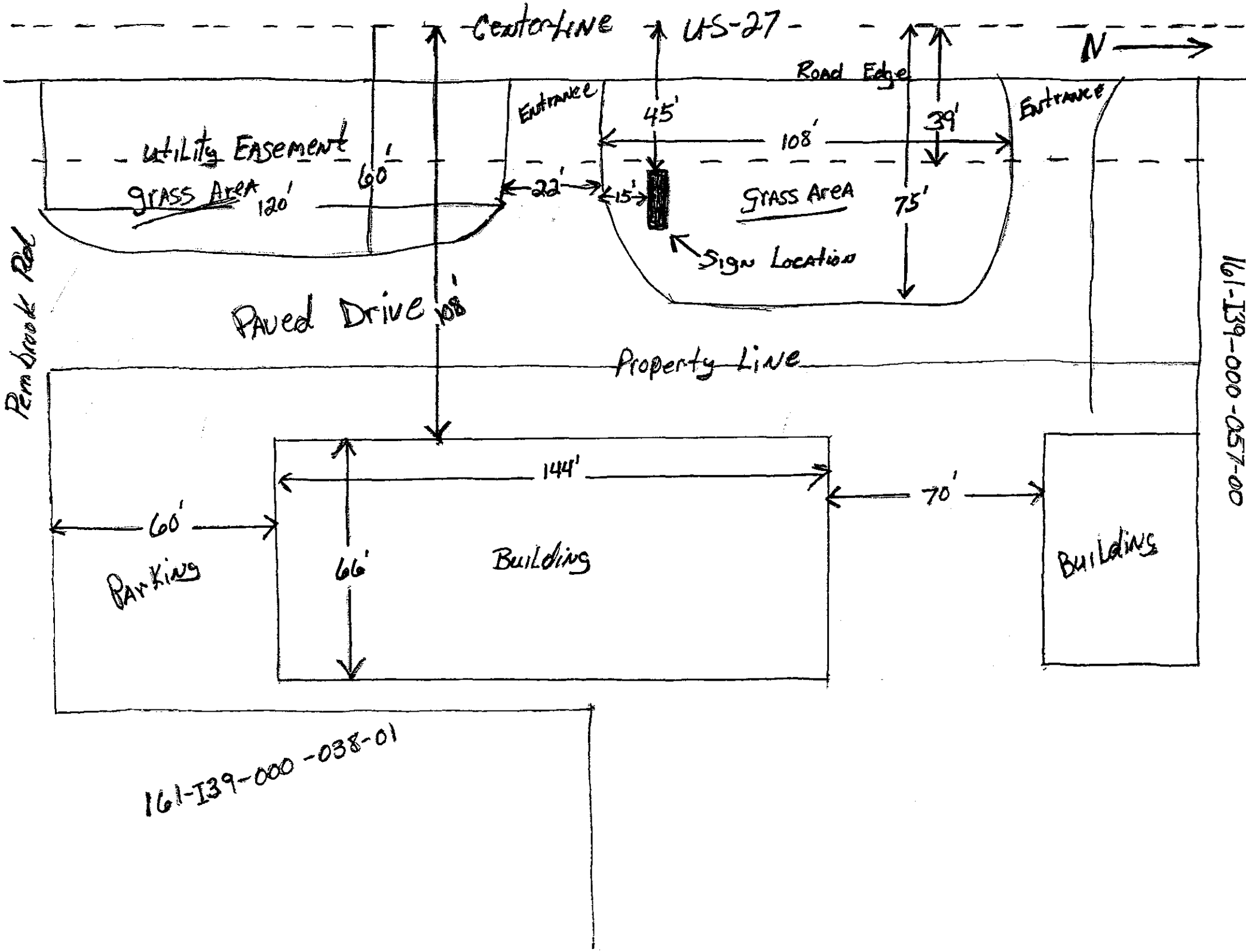
Centerline US-27
N
Road Edge
Entrance
Entrance
45'
108'
39'
utility Easement
60'
grass Area 120'
22'
15'
Grass Area
75'
Sign Location
Pembrook Rd
Paved Drive 108'
Property Line
161-I39-000-057-00
144'
70'
60'
Parking
66'
Building
Building
161-I39-000-038-01

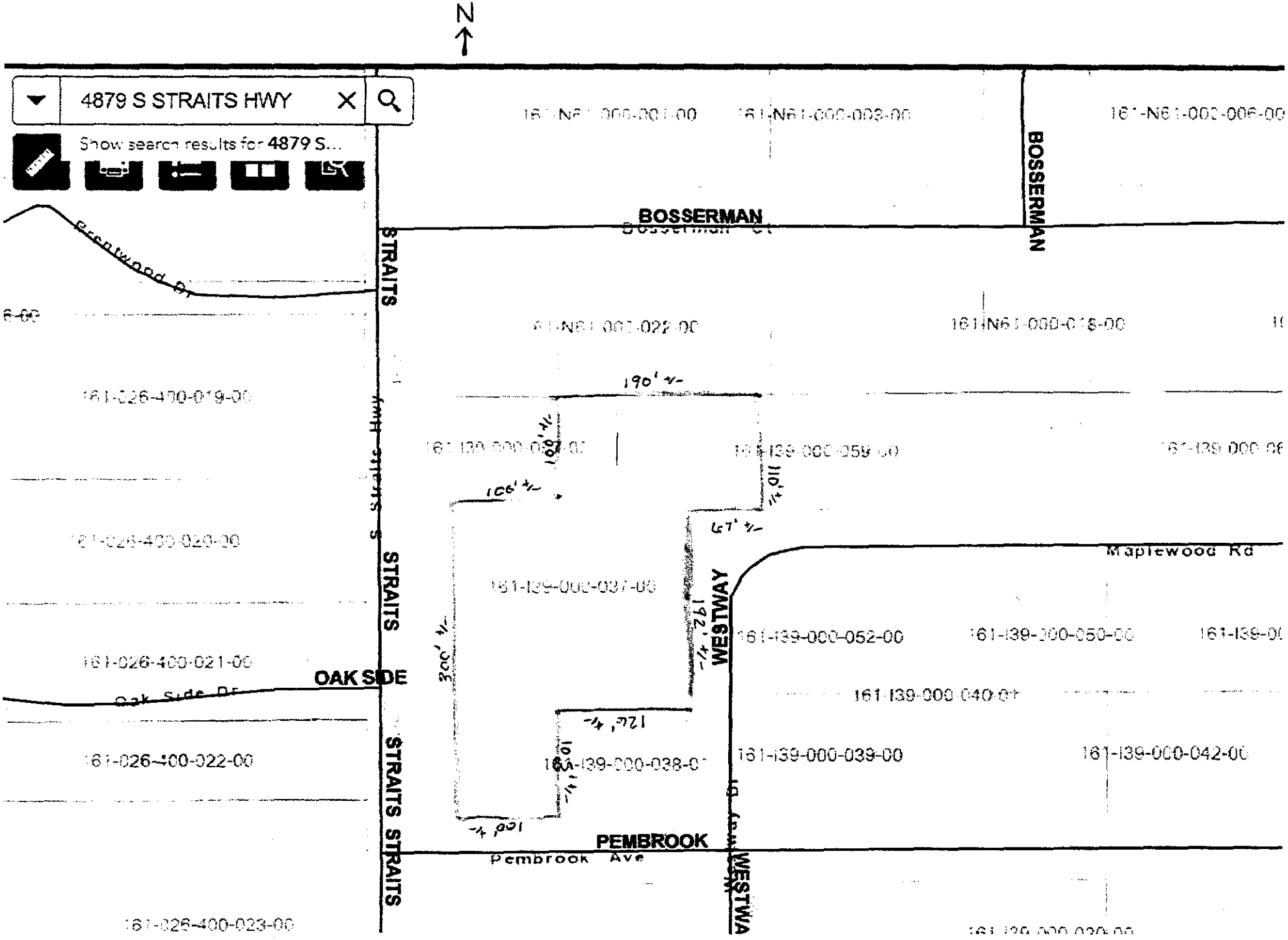
N
4879 S STRAITS HWY
Show search results for 4879 S...
BOSSERMAN
BOSSERMAN
STRAITS
STRAITS
STRAITS
STRAITS
OAK SIDE
PEMBROOK
Pembrook Ave
WESTWAY
WESTWAY
Maplewood Rd
Brentwood Dr
Oak Side Dr
190' +/-
100' +/-
100' +/-
110' +/-
67' +/-
172' +/-
300' +/-
126' +/-
100' +/-
100' +/-
161-026-400-019-00
161-026-400-020-00
161-026-400-021-00
161-026-400-022-00
161-026-400-023-00
161-139-000-037-00
161-139-000-052-00
161-139-000-050-00
161-139-000-040-00
161-139-000-039-00
161-139-000-042-00
161-139-000-038-00

BRP00PY4F30001

D/F ILLUMINATED PYLON SIGN
PYLONE D/F ILLUMINÉ

Installation:	Interior:	☑ Exterior:

Electrical specifications:

Volts:	120	Amp.:	7.0	Circ.:	1

#	Descriptions:
1	WHITE FLEX FACE FACE DE FLEX BLANC
2	FABRICATED ALUMINUM SIGNBOX BOITIER FABRIQUÉ EN ALUMINUM
3	ALUMINUM EXTRUSION RETAINER IMN-94649 & IMN-94651 AS COVER CADRE EN EXTRUSION D 'ALUMINUM IMN-94649 & IMN-94651 COUVERCLE
4	3/16"TK. WHITE ACRYLIC #2447 FACE WITH VINYL APPLIED ON FIRST SURFACE ACRYLIQUE BLANC 3/16"ÉP. #2447 AVEC VINYLE APPLIQUÉ EN PREMIÈRE SURFACE
5	0.051"TK. PRE-PAINTED B&W ALUMINUM SHEET ALUMINUM 0.051"ÉP. PRÉ-PAINT NOIR & BLANC
6	ALUMINUM EXTRUSION RETAINER EX-5 CADRE EN EXTRUSION D' ALUMINUM EX-5
7	0.051"TK. PRE-PAINTED B&W ALUMINUM FABRICATED SIGNBOX BOITIER FABRIQUÉ EN ALUMINUM 0.051"ÉP. PRÉ-PEINT NOIR & BLANC
8	ALUMINUM EXTRUSION DECOR 965015 & 965016 DÉCOR EN EXTRUSION D 'ALUMINUM 965015 & 965016
9	3/16"TK. CLEAR POLYCARBONATE PANEL PANNEAU EN POLYCARBONATE CLAIR 3/16"ÉP.
10	0.090"TK. ALUMINUM BASE COVER CACHE BOULONS EN ALUMINUM 0.090"ÉP.

Notes:

- SEE TECHNICAL DRAWING
- TAKE BRP LOGO FROM VECTOR FILE.
  PRENDRE LA FILE VECTOR POUR LE LOGO.

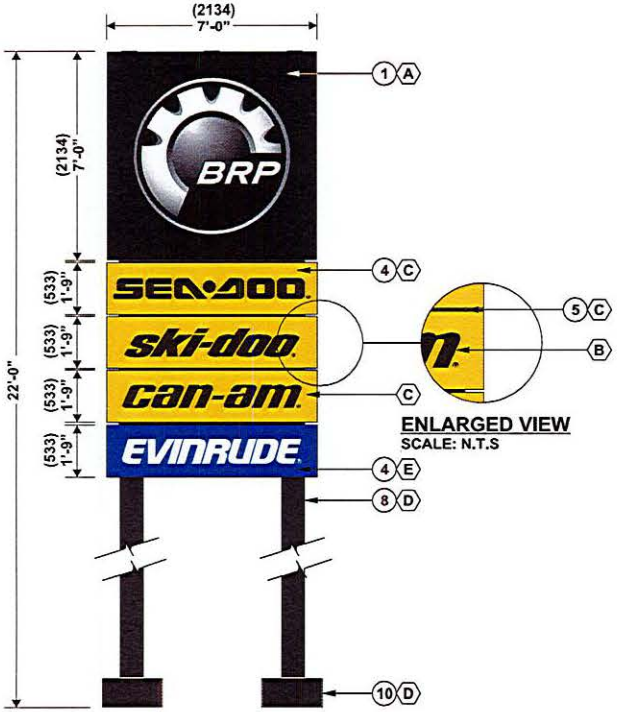

FRONT VIEW
VUE DE FACE

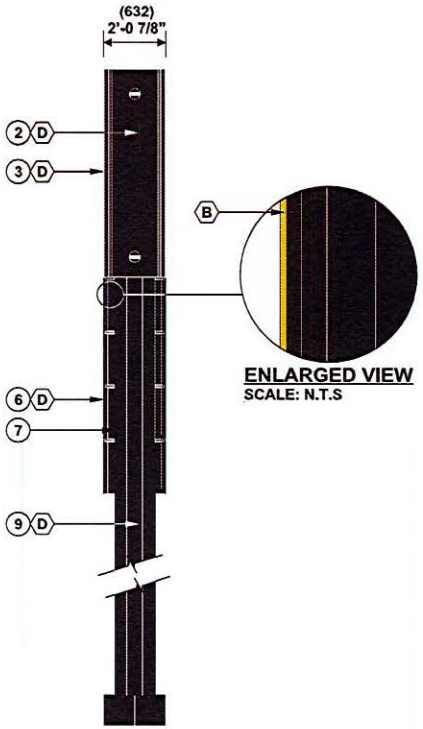

SIDE VIEW
VUE DE CÔTÉ

#		Colors:
A		DIGITALLY PRINTED ON PANAGRAPHIC III WITH GPS 8520 ON FIRST SURFACE
B		BLACK VINYL / VINYLE NOIR #3630-22
C		YELLOW VINYL / VINYLE JAUNE #3632-4104
D		PAINTED BLACK / PEINTURER NOIR
E		BLUE VINYL #3630-157

Customer Approval:_____ Date:____/____/____

PRODUCTION INFORMATION : LL 09.15.2015

FS\BRP00 (BRP)\Pylone\BRP00PY4F30001

This sign is manufactured to be installed in accordance with the requirements of Article 600 of the National Electrical Code and/or Section 12 of the Canadian Electrical Code and/or other applicable local codes. This includes proper grounding and bonding of the sign.

Pattison Sign Group Illuminated signs contain Fluorescent, Neon and/or HID Lamps. These lamps contain Mercury (Hg). Dispose of these lamps according to Local, Provincial, State, or Federal Laws.

IF THIS AGREEMENT INCLUDES THE MANUFACTURING AND INSTALLATION OF A SIGN(S) BY PATTISON SIGN GROUP FOR THE SIGNS DESCRIBED HEREIN, SUCH SIGN(S) SHALL BE BUILT AND INSTALLED IN ACCORDANCE WITH APPLICABLE LAWS AND REGULATIONS. IF A SIGN(S) IS TO BE ERECTED ON A BUILDING, THE CUSTOMER AGREES THAT THE BUILDING IS CAPABLE OF SUPPORTING THE SIGN(S) DESCRIBED HEREIN. SIGN(S) SHALL BE BASED, ARE BUILT AND INSTALLED IN ACCORDANCE WITH APPLICABLE LAWS AND REGULATIONS AND SHALL HOLD PATTISON SIGN GROUP HARMLESS AND INDEMNIFY IT AGAINST ANY AND ALL CLAIMS, LIABILITIES, ACTIONS, PENALTIES, FINES, AND ANY LEGAL FEES INCURRED BY PATTISON SIGN GROUP ARISING FROM THE FAILURE OF THE CUSTOMER (AND/OR ITS AGENTS) DONE SO.

Descriptions:	Plate #:
PLASTIC	BRP1P1F7002-4
ALUMINUM	BRP1P1F7002-1
ALUMINUM	BRP1P1F7003-1 @ -5
XX	XX
XX	XX
XX	XX
XX	XX

ISO 9001:2008 Certified Enterprise

www.pattisonsign.com

© 2014 ENSEIGNES PATTISON SIGN GROUP. ALL RIGHTS RESERVED. NO PART OF THIS DRAWING MAY BE REPRODUCED IN ANY FORM WITHOUT WRITTEN PERMISSION FROM ENSEIGNES PATTISON SIGN GROUP.

ENSEIGNES PATTISON SIGN GROUP
·Tel (506) 735-5506 ·Fax (877) 737-1734 ·Toll Free 1-800-561-9798

Client:	BRP		
Site:	VARIOUS		
Draftsman:	ANNIE CARON	Date:	08.25.2015
Checked By:	JJ		
Page: 1/2	Scale:	1/4" = 1'-0"	

BRP00PY4F30001

ELECTRICAL LAYOUT

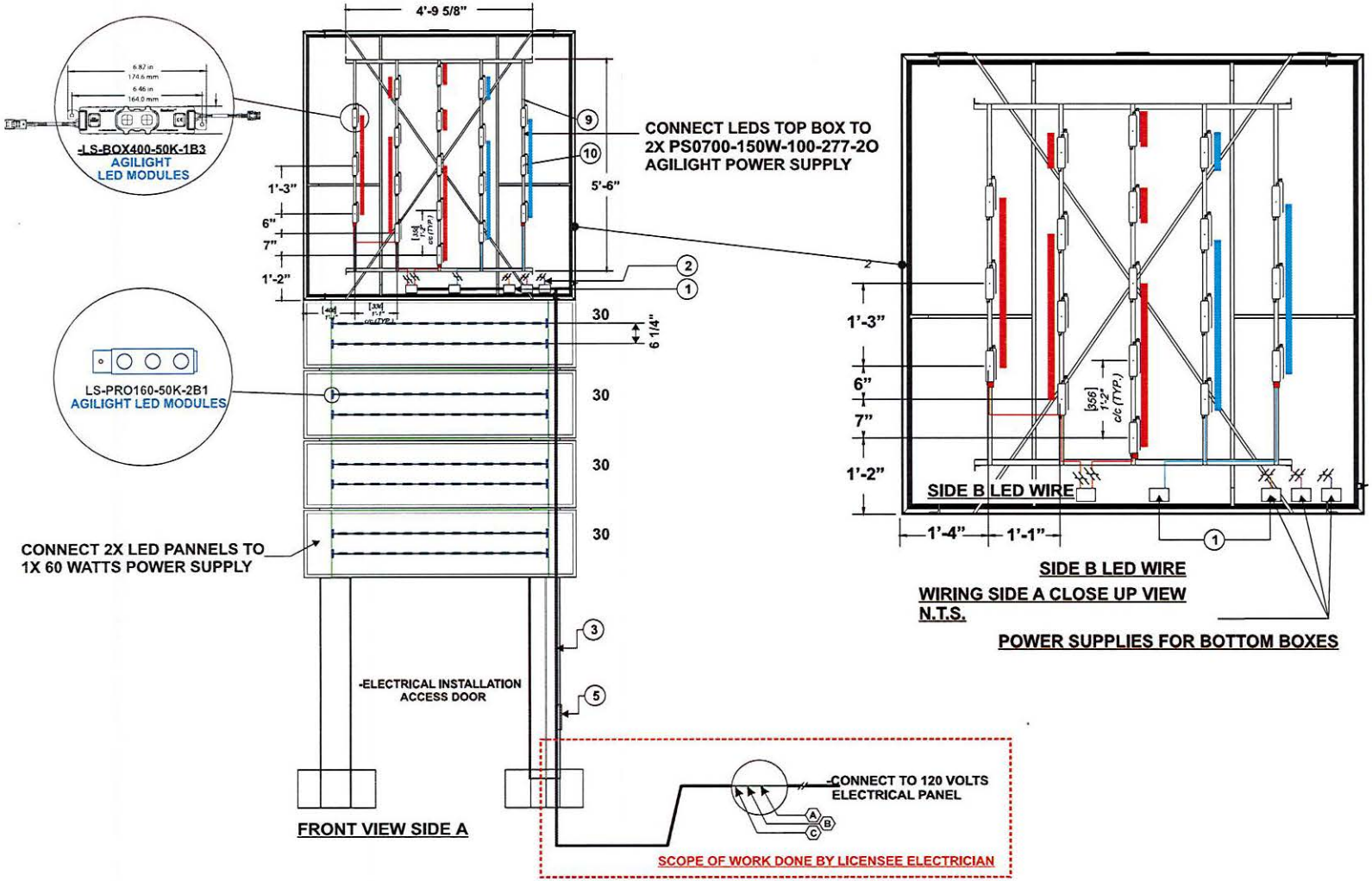

Installation:	Interior:	☑ Exterior:

Electrical specifications:

Volts:	120	Amp.:	7.0	Circ.:	1

#	Descriptions:
1	CLASS 2 POWER SUPPLY
2	LOW VOLTAGE CLASS 2 POWER WIRES
3	BX CONDUIT
4	WEATHERPROOF TOGGLE SWITCH AS PER CODE NEC 600
5	INSTALLATION INPUT 120 VOLTS ELECTRICAL HOOK UP BY OTHERS
*	ILLUMINATED BY LEDS

LED INFO:

-10X LS-BOX400-50K-3B3 AGILIGHT LED MODULES
-8X LS-BOX400-50K-1B3 AGILIGHT LED MODULES
-5X JUMPER CABLE AC-JUMP-18-3-BOXZ-1
-3X END PLUG AC-EPLG-00-3-BOXZ-1

- 2X PS0700-150W-100-277-2O POWER SUPPLY
- (2.0 AMPS EACH)
- TOTAL 240X LS-PRO160-50K-2B1 MODULES (BOITIERS DU BAS)

-4X AGI-ADV-60WATTS POWER SUPPLY (0.9 amps)
-LED-120A0012V-50F

LOADING POWER SUPPLY

- ELECTRICAL HOOKUP SUPPLIED BY OTHERS
- EACH PS0700-150W-100-277-2O POWER SUPPLY CAN RUN MIN 8 TO MAX 16 BOX RAYZ LED MODULES
- EACH 60 WATTS POWER SUPPLY CAN RUN UP TO 60 EACH LS-PRO160-50K-2B1 MODULES

Notes:

-CONDUCTORS OPERATING AT DIFFERENT POTENTIALS THAN CLASS 2 IN AN ENCLOSURE SHALL BE SEPARATED OR SEGREGATED FROM THE CLASS 2 CONDUCTORS

#		Colors:
A		GREEN ELECTRICAL WIRE (GROUND)
B		BLACK ELECTRICAL WIRE
C		WHITE ELECTRICAL WIRE

#	Revision(s)	By:	Date:
1	CHANGE LED QUANTITY	MT	02.20.2019

ENSEIGNES PATTISON SIGN GROUP
Tel (506) 735-5506 ·Fax (877) 737-1734 ·Toll Free 1-800-561-9798

Client:	BRP		
Site:	VARIOUS		
Draftsman:	ANNIE CARON	Date:	08.25.2015
Checked By:	JRB		
Page: 2/ 2	Scale:	3/8" = 1'-0"	

⚠ WARNING!

RISK OF ELECTRIC SHOCK:
1 Turn power OFF before inspection, installation or removal.
1 Shut off power at fuse box or circuit breaker before installation.

RISK OF FIRE:
1 Use only approved wire for input/output connections.
Minimum size 18 AWG (0.82 mm²) secondary only

ISO 9001:2008 Certified Enterprise

© 2015 ENSEIGNES PATTISON SIGN GROUP. ALL RIGHTS RESERVED. NO PART OF THIS DRAWING MAY BE REPRODUCED IN ANY FORM WITHOUT WRITTEN PERMISSION FROM ENSEIGNES PATTISON SIGN GROUP.

161-026-400-017-00
SHANK, DUANE M
4778 S STRAITS HWY
INDIAN RIVER, MI 49749

161-026-400-018-00
SHANK, DUANE M
4778 S STRAITS HWY
INDIAN RIVER, MI 49749

161-026-400-019-00
GRANT, MARK & NANCY H/W
6254 M-33 HWY
ONAWAY, MI 49765

161-026-400-020-00
TOTEM LODGES AT INDIAN RIVER, LLC
4846 S STRAITS HWY
INDIAN RIVER, MI 49749

161-026-400-021-00
CONLEY, DIANE M
7010 OAKSIDE DR
INDIAN RIVER, MI 49749

161-026-400-022-00
CME HOLDINGS
4878 S STRAITS HWY
INDIAN RIVER, MI 49749

161-026-400-023-00
HENDERSHOT, ALLEN K
PO BOX 611
INDIAN RIVER, MI 49749

161-I39-000-019-00
STANLEY, GERALD & PATRICIA H/W
6581 SOUTH ST, PO BOX 626
INDIAN RIVER, MI 49749

161-I39-000-020-00
BODA, SHARALEE SUE
4908 WESTWAY DR
INDIAN RIVER, MI 49749

161-I39-000-021-00
BENNETT, JUDY A
9423 NINE MILE RD
BIG RAPIDS, MI 49307

161-I39-000-033-00
SCHNEIDER, KAREN; PAUL RYBINSKI;
6891 PEMBROOK AVE
INDIAN RIVER, MI 49749

161-I39-000-034-00
BEEBE, DOUGLAS & DANIELLE M MAKIMA
6919 PEMBROOK AVE
INDIAN RIVER, MI 49749

161-I39-000-035-00
LAVIGNE, RALPH J ET UX
4902 WESTWAY DR
INDIAN RIVER, MI 49749

161-I39-000-037-00
LAPRAIRIE, HOWARD & LISA, CO-TTEES
6931 S. STRAITS HWY., PO BOX 263
INDIAN RIVER, MI 49749

161-I39-000-038-01
RENAUD, LARRY LIVING TRUST
PO BOX 3050
INDIAN RIVER, MI 49749

161-I39-000-039-00
RENAUD, LARRY J & ROSALEE M H/W
4878 WESTWAY
INDIAN RIVER, MI 49749

161-I39-000-040-01
LYONS, PERRY & CARYN H/W
6900 PEMBROOK AVE
INDIAN RIVER, MI 49749

161-I39-000-041-00
BAKER, MICHAEL & LILLIAN H/W
6882 PEMBROOK AVE
INDIAN RIVER, MI 49749

161-I39-000-050-00
BAKER, MICHAEL & LILLIAN H/W
6882 PEMBROOK AVE
INDIAN RIVER, MI 49749

161-I39-000-052-00
PROVO, JANE MARIE
8398 STURGEON VALLEY DR
INDIAN RIVER, MI 49749

161-I39-000-057-00
DON BOWEN, INC
6301 M-68, PO BOX 340
INDIAN RIVER, MI 49749

161-I39-000-059-00
FEGAN, TONYA
6920 MAPLEWOOD RD
INDIAN RIVER, MI 49749

161-I39-000-060-00
KAUMEYER, JOHN S
6902 MAPLEWOOD RD
INDIAN RIVER, MI 49749

161-I39-000-062-00
GRINDLE, DAVID & EMILY H/W
6892 MAPLEWOOD RD
INDIAN RIVER, MI 49749

161-N61-000-001-00
TUSCARORA TOWNSHIP VOLUNTEER
INDIAN RIVER, MI 49749

161-N61-000-003-00
CHROMICZ, MATTHEW J
6940 BOSSERMAN CT
INDIAN RIVER, MI 49749

161-N61-000-004-00
LALONDE, RUSSELL
6900 BOSSERMAN CT
INDIAN RIVER, MI 49749

161-N61-000-005-00
BURNS, BRIAN J, TRUSTEE
6864 BOSSERMAN CT
INDIAN RIVER, MI 49749

161-N61-000-018-00
BURILL, KIRK & CAROL H/W
1070 LAUREL RD, 16
NOKOMIS, FL 34275

161-N61-000-020-00
TRAMMEL, JON
6941 BOSSERMAN CT
INDIAN RIVER, MI 49749

161-N61-000-021-00
NAULT, JUDY M L/EWPTS, THEN TO:
6959 BOSSERMAN CT
INDIAN RIVER, MI 49749

161-N61-000-022-00
NAULT, JUDY M L/EWPTS, THEN TO:
6959 BOSSERMAN CT
INDIAN RIVER, MI 49749

161-N61-000-022-01
RICHMOND, BARBARA
7375 TAMMY DR
INDIAN RIVER, MI 49749

161-026-400-017-00
OCCUPANT
4778 S STRAITS HWY
INDIAN RIVER, MI 49749

161-026-400-018-00
OCCUPANT
4790 S STRAITS HWY
INDIAN RIVER, MI 49749

161-026-400-019-00
OCCUPANT
4812 S STRAITS HWY
INDIAN RIVER, MI 49749

161-026-400-020-00
OCCUPANT
4846 S STRAITS HWY
INDIAN RIVER, MI 49749

161-026-400-021-00
OCCUPANT
4852 S STRAITS HWY
INDIAN RIVER, MI 49749

161-026-400-022-00
OCCUPANT
4878 S STRAITS HWY
INDIAN RIVER, MI 49749

161-026-400-023-00
OCCUPANT
4942 S STRAITS HWY
INDIAN RIVER, MI 49749

161-026-400-023-00
OCCUPANT
4932 S STRAITS HWY
INDIAN RIVER, MI 49749

161-I39-000-020-00
OCCUPANT
4908 WESTWAY DR
INDIAN RIVER, MI 49749

161-I39-000-021-00
OCCUPANT
6932 ELMWOOD RD
INDIAN RIVER, MI 49749

161-I39-000-033-00
OCCUPANT
6891 PEMBROOK AVE
INDIAN RIVER, MI 49749

161-I39-000-034-00
OCCUPANT
6919 PEMBROOK AVE
INDIAN RIVER, MI 49749

161-I39-000-035-00
OCCUPANT
4902 WESTWAY DR
INDIAN RIVER, MI 49749

161-I39-000-037-00
OCCUPANT
4879 S STRAITS HWY
INDIAN RIVER, MI 49749

161-I39-000-038-01
OCCUPANT
4878 WESTWAY DR
INDIAN RIVER, MI 49749

161-I39-000-039-00
OCCUPANT
6920 PEMBROOK AVE
INDIAN RIVER, MI 49749

161-I39-000-040-01
OCCUPANT
6900 PEMBROOK AVE
INDIAN RIVER, MI 49749

161-I39-000-041-00
OCCUPANT
6880 PEMBROOK AVE
INDIAN RIVER, MI 49749

161-I39-000-050-00
OCCUPANT
6879 MAPLEWOOD RD
INDIAN RIVER, MI 49749

161-I39-000-052-00
OCCUPANT
8398 STURGEON VALLEY DR
INDIAN RIVER, MI 49749

161-I39-000-057-00
OCCUPANT
4827 S STRAITS HWY
INDIAN RIVER, MI 49749

161-I39-000-059-00
OCCUPANT
6920 MAPLEWOOD RD
INDIAN RIVER, MI 49749

161-I39-000-062-00
OCCUPANT
6892 MAPLEWOOD RD
INDIAN RIVER, MI 49749

161-N61-000-001-00
OCCUPANT
4761 S STRAITS HWY
INDIAN RIVER, MI 49749

161-N61-000-003-00
OCCUPANT
6940 BOSSERMAN CT
INDIAN RIVER, MI 49749

161-N61-000-004-00
OCCUPANT
6900 BOSSERMAN CT
INDIAN RIVER, MI 49749

161-N61-000-005-00
OCCUPANT
6882 BOSSERMAN CT
INDIAN RIVER, MI 49749

161-N61-000-018-00
OCCUPANT
6881 BOSSERMAN CT
INDIAN RIVER, MI 49749

161-N61-000-020-00
OCCUPANT
6941 BOSSERMAN CT
INDIAN RIVER, MI 49749

161-N61-000-021-00
OCCUPANT
6959 BOSSERMAN CT
INDIAN RIVER, MI 49749

161-N61-000-022-00
OCCUPANT
6961 BOSSERMAN CT
INDIAN RIVER, MI 49749

161-N61-000-022-01
OCCUPANT
4819 S STRAITS HWY
INDIAN RIVER, MI 49749

161-026-400-017-00
OCCUPANT
7060 BRENTWOOD DR
INDIAN RIVER, MI 49749

161-026-400-017-00
OCCUPANT
7092 BRENTWOOD DR
INDIAN RIVER, MI 49749

161-026-400-017-00
OCCUPANT
7137 BRENTWOOD DR
INDIAN RIVER, MI 49749

161-026-400-017-00
OCCUPANT
7141 BRENTWOOD DR
INDIAN RIVER, MI 49749

161-026-400-017-00
OCCUPANT
7155 BRENTWOOD DR
INDIAN RIVER, MI 49749

161-026-400-021-00
OCCUPANT
7010 OAK SIDE DR
INDIAN RIVER, MI 49749

161-026-400-021-00
OCCUPANT
7020 OAK SIDE DR
INDIAN RIVER, MI 49749

161-026-400-021-00
OCCUPANT
7030 OAK SIDE DR
INDIAN RIVER, MI 49749

161-026-400-023-00
OCCUPANT
4904 S STRAITS HWY
INDIAN RIVER, MI 49749

161-026-400-023-00
OCCUPANT
4970 S STRAITS HWY
INDIAN RIVER, MI 49749

161-026-400-023-00
OCCUPANT
4932 S STRAITS HWY
INDIAN RIVER, MI 49749

CHEBOYGAN COUNTY
PLANNING AND ZONING DEPARTMENT

CHEBOYGAN COUNTY BUILDING ▪ 870 S. MAIN STREET, PO BOX 70 ▪ CHEBOYGAN, MI 49721
PHONE: (231)627-8489 ▪ FAX: (231)627-3646
www.cheboygancounty.net/planning/

DIMENSIONAL VARIANCE
STAFF REPORT

Item: Requests a variance from section 17.19.8. of the Zoning Ordinance (that indicates freestanding signs in Commercial Development zoning districts shall have a maximum of 80 sq. ft. of sign surface area.	**Prepared by:** Jennifer Merk
Date: November 21, 2019	**Expected Meeting Date:** November 27, 2019

GENERAL INFORMATION

Applicant(s): Omega Electric & Sign Company Inc.

Owner(s): Burt Lake Marina/Ty LaPrairie

Contact person: Ryan Fairchild/President of Omega Electric & Sign Company

Phone: 989-358-8243

Requested Action: The applicant requests a variance from Section 17.19.8. indicating the maximum sign surface area for freestanding signs permitted in the Commercial Development (D-CM) zoning districts is 80 square feet. The applicant proposes replacing the existing non-conforming freestanding sign with a new light-emitting diode (LED)-illuminated freestanding sign with 98 square feet of sign surface area.

BACKGROUND INFORMATION

Burt Lake Marina is located on the 1.7 acre subject property at 4879 S. Straits Highway in Tuscarora Township, just over a quarter mile from the intersection of M-68 and S. Straits Highway, and within the Indian River Heights subdivision. The applicant would like to replace the existing non-conforming freestanding sign with approximately 92 sq. ft. of sign surface area with a Bombardier Recreational Products (BRP) corporate/dealer standard sign with 98 sq. ft. of sign surface area. The Zoning Ordinance does not permit freestanding signs with greater than 80 square feet of sign area in the Commercial Development zoning districts. (As proposed, the sign surface area is approximately 23% larger than this maximum dimensional standard.) Maximum dimensional sign standards intend to, in part, minimize possible adverse impact on nearby public and private properties.

The Zoning Board of Appeals approved a 5.5-ft. setback variance on September 28, 2005 from S. Straits Highway for construction of a covered walkway adjoining an existing building, and a Site Plan Review application for the covered walkway was approved by the Planning Commission on November 2, 2005.

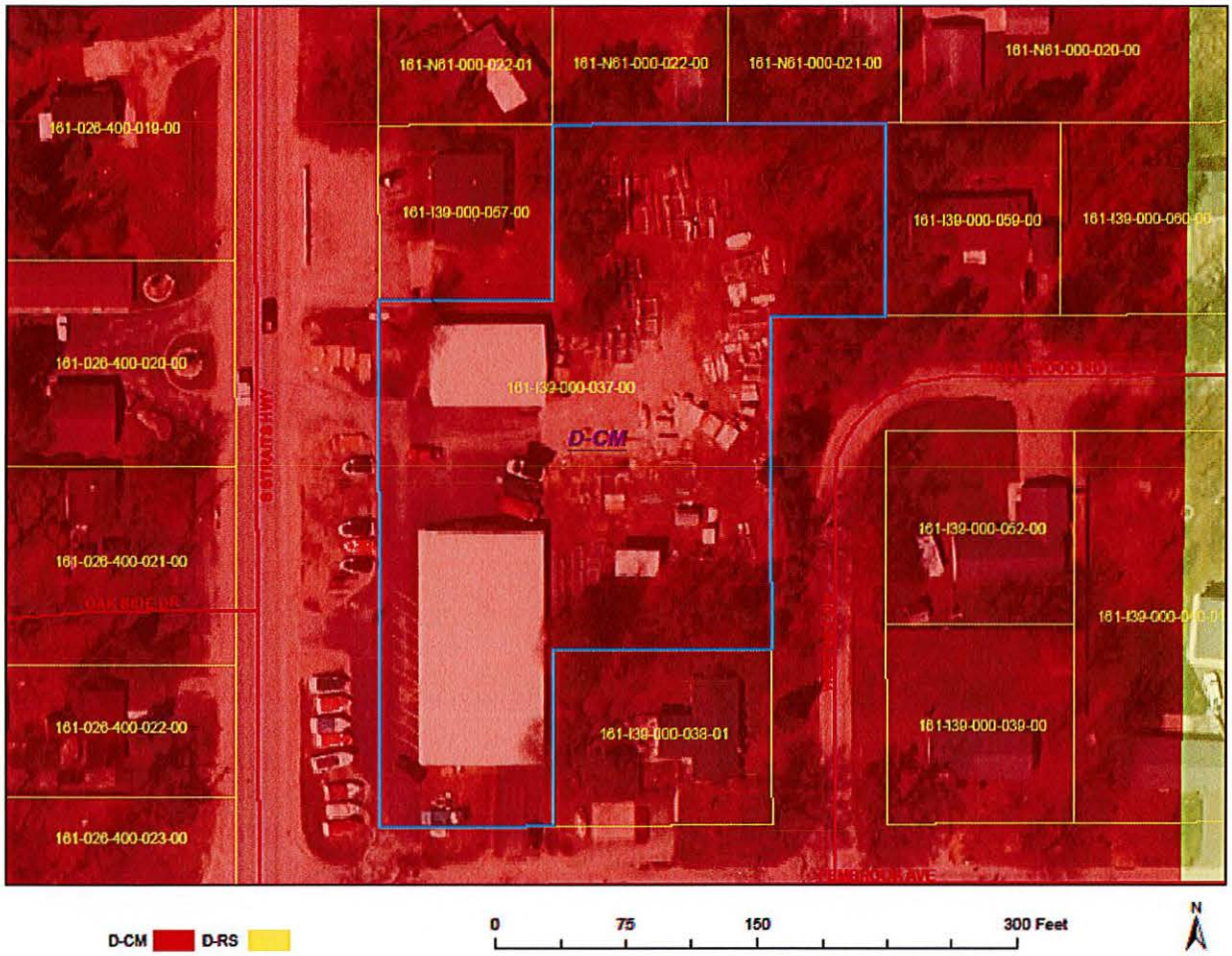

Figure 1. Location and zoning of subject property at 4879 S. Straits Hwy., Tuscarora Twp.

Surrounding Zoning:
North: Commercial Development (D-CM)
East: same
South: same
West: same

Surrounding Land Uses:
Commercial land uses mixed with residential exist to the north and west. Residential land uses are located east and south of the subject property.

Environmentally Sensitive Areas: (steep slopes, wetlands, woodlands, stream corridor, floodplain):
There are no known environmentally sensitive areas on the subject property.

Public comments:
No public comments have been received as of this writing.

CHEBOYGAN COUNTY ZONING BOARD OF APPEALS
Wednesday, November 27, 2019 at 7:00 PM
Room 135 – Commissioners Room
Cheboygan County Building, 870 S. Main St., Cheboygan, MI 49721

Applicant:
Omega Electric & Sign Company
1109 Crittenden Ct.
Alpena, MI 49707

Owner:
Burt Lake Marina/Ty LaPrairie
4879 S. Straits Hwy
Indian River, MI 49749

Parcel: 161-I39-000-037-00

General Findings:

1. The 1.7 acre subject property is located at 4879 S. Straits Highway in Tuscarora Township and within the Indian River Heights subdivision platted in 1965.
2. The subject property is zoned Commercial Development (D-CM).
3. Burt Lake Marina is the non-residential use located on the subject property.
4. The Zoning Board of Appeals approved a 5.5-ft. setback variance from S. Straits Highway for a covered walkway addition to an existing building on September 28, 2005.
5. A Site Plan Review application for the covered walkway addition was approved by the Planning Commission on November 2, 2005.
6. A non-conforming freestanding sign exists on the subject property with a total sign surface area of 92 sq. ft.
7. The maximum sign surface area permitted for freestanding signs within the Commercial Development zoning districts is 80 sq. ft., per Section 17.19.8 of the Zoning Ordinance.
8. The applicant is requesting a dimensional variance to replace the existing non-conforming freestanding sign with a new freestanding sign with a total sign surface area of 98 sq. ft.

23.5.4. (Rev. 09/11/04, Amendment #36)

A dimensional variance may be granted by the Zoning Board of Appeals only in cases where the applicant demonstrates in the official record of the public hearing that practical difficulty exists by showing all of the following:

23.5.4.1. That the need for the requested variance is due to unique circumstances or physical conditions of the property involved, such as narrowness, shallowness, shape, water, or topography and is not due to the applicant's personal or economic difficulty.

A. The physical conditions of the property that support granting the variance request are as follows:

   1. There are no physical conditions identified that support granting the variance request; however, Burt Lake Marina is a BRP dealer and as such dealers are required to follow the brand standard. The change to the proposed sign is likely driven at the corporate level which may be considered a unique circumstance.

This standard has been met.

B. The physical conditions of the property which support denying the variance are as follows:

1. None identified.

This standard has not been met.

23.5.4.2. That the need for the requested variance is not the result of actions of the property owner or previous property owners (self-created).

A. Actions which have occurred which support granting the variance which were not caused by the applicant:

1. The business located on the subject property is an authorized BRP dealer, and as such to maintain platinum dealer status is required to follow brand standards, including those for advertising signage.

This standard has been met.

B. Actions which the applicant has taken that results in the request for the variance and therefore requires denial of the variance:

1. None identified

This standard has been met.

23.5.4.3 That strict compliance with regulations governing area, setback, frontage, height, bulk, density or other dimensional requirements will unreasonably prevent the property owner from using the property for a permitted purpose, or will render conformity with those regulations unnecessarily burdensome.

A. Zoning regulation requirements result in the following conditions which prevent use of the property or cause undue hardship:

1. Strict compliance with the zoning regulations would prevent the proposed freestanding sign from being updated to BRP brand standards, thus resulting in the loss of the business's platinum dealer status. As a result, conformity with the zoning regulations would be unnecessarily burdensome.

This standard has been met.

B. Factors that show no adverse effects caused by the zoning regulation conditions:

1. The existing non-conforming freestanding sign currently functions to advertise the

business and some of the dealer brands available for sale and/or service.

This standard has not been met.

23.5.4.4 That the requested variance is the minimum variance necessary to grant the applicant reasonable relief as well as to do substantial justice to other property owners in the district.

A. Factors that show the variance cannot be reduced beyond that requested and still meet the needs of the applicant, and still not infringe upon the rights of the surrounding property owners:

1. Although the design of the proposed freestanding sign is set by BRP and apparently no other options exist to honor minimum corporate standards, the dimensional variance to allow the sign as proposed is the minimum necessary.

This standard has been met.

B. Factors that show the variance requested is more than needed and/or would infringe upon the rights of surrounding property owners:

1. None identified

This standard has not been met.

23.5.4.5 That the requested variance will not cause an adverse impact on surrounding property, property values, or the use and enjoyment of property in the neighborhood or zoning district.

A. Factors that show how granting the variance would not result in unfavorable impacts on the surrounding properties, neighborhood or zoning district:

1. The proposed freestanding sign would have a total sign area of 98 sq. ft. and would replace an existing non-conforming freestanding sign with a total sign area of 92 sq. ft., and thus may be considered a nominal increase.
2. The proposed freestanding sign is compatible with the Commercial Development zoning district in which it would be located as well as existing signage in the area.

This standard has been met.

B. Factors that show how granting the variance would adversely impact the neighborhood or zoning district.

1. None identified.

This standard has not been met.

DECISION

TIME PERIOD FOR JUDICIAL REVIEW

MCLA 125.3606 provides that a person having an interest affected by the zoning ordinance may appeal a decision of the Zoning Board of Appeals to the Circuit Court. Any appeal must be filed within thirty (30) days after the Zoning Board of Appeals certifies this Decision in writing or approves the minutes of its decision.

DATE DECISION AND ORDER ADOPTED

Wednesday, November 27, 2019

_____

Charles Freese, Chairperson

_____

John Thompson

CHEBOYGAN COUNTY

ZONING BOARD OF APPEALS

Rules of Procedure

1. **PURPOSE.** These Rules of Procedure are adopted to provide for the efficient and uniform administration of the Cheboygan County Zoning Board of Appeals (ZBA).

2. **MEMBERSHIP.**

2.1 Regular Members. The ZBA shall be composed of five (5) regular members appointed by the Cheboygan County Board of Commissioners as provided in the Cheboygan County Zoning Ordinance. For purposes of these Rules of Procedures the phrase "members of the ZBA" shall mean the regular ZBA members and any alternate members designated to serve on a particular case.

3. **OFFICERS AND COMMITTEES.**

3.1 **Officers.** The officers of the ZBA shall be a Chairperson, Vice Chairperson, and Secretary/Recording Secretary.

3.2 **Election of Officers.** The officers of the ZBA shall be chosen from its members by the ZBA at its annual meeting held in January of each year. The term of office for each officer shall be one (1) year, or until his or her successor is chosen and assumes office.

3.3 **Chairperson.** The Chairperson shall preside over all meetings of the ZBA.

3.4 **Vice Chairperson.** The Vice Chairperson shall perform the duties of the Chairperson during the absence or disability of the Chairperson.

3.5 **Secretary/Recording Secretary.** The Secretary/Recording Secretary shall supervise all clerical work of the board, assure that the minutes of all meetings of the ZBA are properly recorded and that notices for all meetings are duly given. He or she shall also perform such other duties as may be assigned or delegated to them by the Chairperson or the ZBA.

3.6 **Vacancies.** If a vacancy occurs in the office of Chairperson, the Vice Chairperson shall assume the office of Chairperson for the remainder of the term. All other vacancies in offices shall be filled by the ZBA from its members for the unexpired term of the office.

3.7 **Training.** Four (4) hours of career development training are required yearly. In-house classes scheduled by the Planning Director shall count toward this requirement. Outside training may also count in whole or in part toward this objective if approved by the Director of Planning and Zoning.

4. **MEETINGS**

4.1 **Regular Schedule.** The regular meetings of the ZBA shall be scheduled at the annual meeting in January each year and posted as required by the Open Meetings Act, as amended. If any regularly scheduled meeting falls on a legal holiday, the ZBA shall select an alternate date in the same month for the regular meeting. Notice of this alternate date shall be given as provided in Section 5.3.

4.2 **Special Meetings.** Special meetings of the ZBA shall be held at the call of the Chairperson or upon written request of a majority of the regular members of the ZBA filed with the Secretary/Recording Secretary. No less than eighteen (18) hours before the scheduled special meeting, the Secretary/Recording Secretary or his/her designee shall provide each member of the ZBA with a notice of the special meeting, specifying the date, time, place, and purpose of the special meeting. This notice shall be given personally to each regular or designated alternate member of the ZBA or left at the member's usual place of residence.

4.3 **Place of Meeting**. Meetings of the ZBA shall be held at the Cheboygan County building located at 870 S. Main Street, Cheboygan, Michigan, 49721, Commissioners' Room. Whenever the Chairperson determines that the place of the meeting will likely have inadequate space for members of the public, the location of the meeting may be changed to a larger meeting facility. A notice of the change in meeting location shall be prominently posted at the Cheboygan County building so that it is visible from outside and shall be published in a newspaper of general circulation within the county, if such publication can be accomplished prior to the meeting.

4.4 **Time of Meetings.** Meetings of the ZBA shall begin at 7:00 p.m., unless the ZBA, by a vote of a majority of its members, specifies a different starting time. The ZBA shall not begin considering any matter on the agenda after 10:30 p.m., except by unanimous consent of the members present. Matters on the agenda which have not been considered may be heard at an adjourned hearing, provided a motion specifies the time, date, and place of the adjourned hearing, or shall be placed on the agenda of the next regular meeting, or on the agenda of a special meeting, if one is called.

4.5 **Change in Schedule.** Changes in the schedule of a regular meeting shall not be made except by a vote of a majority of the entire ZBA. If a quorum is not present at a regular meeting, the meeting shall be rescheduled, and a notice of the rescheduled regular meeting shall be posted as required in Section 5.3.

4.6 **Meeting Cancellation.** Meetings may be cancelled by the Director of Planning and Zoning after consulting with the Chairman in the event that new business or tabled old business is not on the agenda, or in the case of severe inclement weather or other natural disaster.

4.7 **Meeting Attendance.** Each regular member of the ZBA shall attend all regular and special meetings of the ZBA, unless excused by the Chairperson for good cause. A regular member of the ZBA with three (3) unexcused absences (consecutive or nonconsecutive absences) may be removed from office by the Cheboygan County Board of Commissioners following notice and a hearing.

5. PUBLIC NOTICE OF MEETINGS

5.1 **Public Notice of Meetings**. The Secretary/Recording Secretary or his/her designee shall be responsible for providing the proper notice of all meetings of the ZBA. Notices shall comply with the Open Meetings Act, as amended, the Michigan Zoning Enabling Act, as amended, and the Cheboygan County Zoning Ordinance, as amended.

5.2 **Regular Meetings**. The Secretary/Recording Secretary or his/her designee shall post on the County's website, and at the Cheboygan County building so that it is visible from outside, a notice within ten (10) days after the first meeting of the ZBA in each calendar year indicating the dates, times, and places of regular meetings.

5.3 **Schedule Change.** Whenever the ZBA changes its schedule of regular meetings, the Secretary/Recording Secretary or his/her designee shall, within three (3) business days after the regular meeting at which the change was made, post on the County's website, and at the Cheboygan County building so that it is visible from outside a public notice stating the dates, times, and places of the new schedule of regular meetings.

5.4 **Special Meetings.** No less than eighteen (18) hours before any scheduled special meeting, the Secretary/Recording Secretary or his/her designee shall post on the County's website, and at the Cheboygan County building so that it is visible from outside a notice of the special meeting, including the purpose for which the special meeting is called.

6. **QUORUM AND VOTING.**

6.1 **Quorum.** A majority of the regular members of the ZBA shall constitute a quorum for the transaction of business at all meetings of the ZBA. The Zoning Board of Appeals shall not conduct business unless a majority of the regular members is present.

6.2 **Voting.** An affirmative vote of a majority of the entire ZBA shall be necessary to grant a variance, to reverse an order, requirement, decision, or determination of the zoning administrator or other administrative official or body, or to decide in favor of the applicant on any matter before the ZBA. Unless the Cheboygan County Zoning Ordinance requires otherwise, an affirmative vote of a majority of the ZBA members present shall be necessary to make all other decisions.

7. **REGULAR MEETING AGENDA.**

7.1 **Regular Meeting Agenda.** The agenda for a regular meeting of the ZBA shall be as follows:

a. Pledge of allegiance
b. Call to order.
c. Roll call.
d. Approval of minutes.
e. New business, including scheduled public hearings.
f. Unfinished business.
g. ZBA comments.
h. Public comments.
i. Adjournment.

The ZBA reserves the right to alter the agenda by a majority vote of the members present at the meeting.

7.2 **Special Meeting Agenda**. Whenever the ZBA meets in a special meeting, the matters to be considered shall be stated in the notice of the special meeting. No other matters shall be considered, except when all regular members of the Zoning Board of Appeals are present and concur.

8. **CONDUCT OF MEETINGS.**

8.1 **Public Hearing Procedure.** The procedure for a public hearing of the ZBA shall be as follows:

a. The Chairperson shall open the public hearing by announcing the matter to be heard and by summarizing the standards or other regulations of the zoning ordinance on which the ZBA's decision must be based.

b. Determination by the Chairperson whether a time limitation will be imposed on members of the public wishing to address the ZBA during the public hearing.
c. Staff report, if applicable.
d. Compilation of list of all exhibits to be considered by the ZBA when making its decision.
e. Presentation by the applicant or applicant's attorney or other agents.
f. Correspondence and/or persons speaking in favor of the application.
g. Correspondence and/or persons speaking in opposition to the application.
h. Rebuttal comments by the applicant or applicant's attorney or other agents.
i. Chairperson declares public hearing portion of the case closed.
j. The ZBA begins its deliberations on the case.
    1. During deliberations the ZBA may solicit information from the applicant, applicant's attorney or other agents, or from members of the public. However, the solicitation of additional information shall not be construed as the reopening of the public hearing, unless so declared by the Chairperson. If the public hearing portion of the case is reopened, then the procedures for the original public hearing shall be followed.
    2. During deliberations the ZBA shall also specifyy in writing the findings of fact on which it bases its decision.
    3. If during deliberations the ZBA determines that additional information is needed to make its decision, it may adjourn the case to a specific time, date, and place to receive that additional information. At the adjourned time, date, and place, the public hearing portion of the case shall be reopened, but only to receive the requested additional information and other information relevant to that issue.
k. At the conclusion of its deliberations, the ZBA shall adopt a motion documenting its decision.

8.2 **Members of the Public.** Members of the public wishing to address the ZBA during the meeting or during a public hearing shall first be recognized by the Chairperson.

8.3 **Time for Public Comments.** The public comment portion of the meeting (outside public hearings) shall be limited to 15 minutes, unless extended by a majority vote of the ZBA members present.

8.4 **Opportunity for Public Comment.** Each member of the public desiring to address the ZBA (outside public hearings) shall be given an opportunity to speak equal to the time allotted for public comments divided by the number of speakers desiring to address the ZBA during the public comment period, or five (5) minutes, whichever is less.

8.5 **Limitation of Public Comments During Public Hearings.** Prior to opening a public hearing, the Chairperson shall determine the number of individuals from the general public who may desire to address the ZBA during the public hearing. Based on this determination, the Chairperson may establish a reasonable time limitation for each member of the general public when addressing the ZBA during the public hearing. Members of the general public expressing a desire to address the ZBA may transfer their allotted time to another individual, who may act as a spokesperson for the group. The time limitation imposed pursuant to this section, however, shall not apply to the applicant or the applicant's attorney or other agents.

8.6 **Adjournment of Scheduled Public Hearings.** A property owner, agent or applicant who has a public hearing scheduled regarding an application submitted for a decision of the ZBA pursuant to the applicable provisions of the Cheboygan County Zoning Ordinance #200 shall be entitled to no more than two (2) adjournments of the public hearing. Any request for an adjournment under this rule shall be in writing and shall be received by the Planning and Zoning Department no less than four (4) business days prior to the scheduled public hearing. The Planning and Zoning Department shall be empowered to grant a request for an adjournment under this rule and at the time the adjournment is granted shall be empowered to schedule a new time, date and place for the rescheduled public hearing. If the property owner, agent or applicant fails to comply with the requirements of this rule, then the ZBA shall proceed with the public hearing as scheduled, unless the property owner, agent or applicant voluntarily withdraws the application then pending before the ZBA. Any such withdrawal shall require the payment of a new application fee in the event the matter is resubmitted.

8.7 **Written Statements Submitted by the Public.** All written statements (both during public hearings and outside public hearings) should be given to the Secretary/Recording Secretary or his/her designee prior to the commencement of the meeting or public hearing. All written statements and documents presented to the ZBA by an individual are considered public documents and shall be retained in the public record of the meeting.

8.8 **Disorderly Conduct at Meetings.** Individuals addressing the ZBA (both during public hearings and outside public hearings) should take into consideration the rules of common courtesy.

The comments by members of the public cannot be used to make personal attacks against members of the ZBA or county staff. The Chairperson may call to order any person who is being disorderly by speaking or otherwise disrupting the meeting, failing to be germane, speaking longer than the allotted time, yelling, shouting or speaking vulgarities. Such person shall thereupon be seated until the Chairperson determines whether the person is in order. If a person is called out of order, he or she shall not be permitted to continue to speak at the same meeting or public hearing, except by a majority vote of the ZBA members present.

If the person continues to be disorderly to the extent that the ZBA cannot continue to conduct business, the Chairperson shall consider the person to be in breach of the peace and may request the assistance of a law enforcement officer to remove the person from the meeting. The ZBA shall have the right to adjourn the meeting if it is interrupted due to the disorderly conduct of any person. No person shall be removed from a public meeting, except for an actual breach of the peace committed at the meeting.

8.9 **Rehearings.**

a. Except as provided in this subsection, a decision of the ZBA shall be final. The ZBA may grant a rehearing under exceptional circumstances for any decision made by it. Exceptional circumstances shall mean any of the following:
   1. The applicant who brought the matter before the ZBA made misrepresentations concerning a material issue which was relied upon by the ZBA in reaching its decision.
   2. There has been a material change in circumstances regarding the ZBA's findings of fact which occurred after the public hearing.
   3. The county attorney by a written opinion states that in the attorney's professional opinion the decision made by the ZBA or the procedure used in the matter was clearly erroneous.

b. A rehearing may be requested by the applicant or by the Zoning Administrator, or a rehearing may be granted by the ZBA on its own motion, pursuant to the following procedure:
   1. A request for a rehearing which is made by an applicant or the Zoning Administrator must be made within thirty (30) days from the date of approval of the ZBA's minutes regarding the decision for which the rehearing is being requested.
   2. A request for a rehearing made by the Zoning Administrator or a rehearing granted by the ZBA on its own motion may be granted at any time as long as the applicant has not been prejudiced by any delay.
   3. Whenever the ZBA considers granting a rehearing, it shall provide written notice to the applicant that a rehearing will be considered.

The notice may be served upon the applicant by first class mail at the applicant's last known address, or may be served personally on the applicant. The notice shall be provided not less than fifteen (15) days before the time set for the hearing. Service by mail shall be complete upon mailing. In addition to serving the above notice on the applicant, all other notice requirements for the type of decision being heard shall be completed before the ZBA holds a hearing at which it considers whether to grant a rehearing.

4. If the ZBA grants a rehearing, then the rehearing on the merits shall not be held until all notice requirements for the type of decision being reheard have been satisfied.

8.10 **Robert's Rules of Order.** Except as modified by these Rules of Procedures and state or federal law, the ZBA shall follow Robert's Rules of Order, as Revised, for all procedural questions.

9. **RECORD OF MEETINGS.**

9.1 **Recording Responsibility.** The Secretary/Recording Secretary or his/her designee shall be responsible for maintaining the official records and minutes of each meeting of the ZBA. The minutes shall include all the actions of the ZBA with respect to motions. The minutes shall include the names of ZBA members who present motions and ZBA members who second motions as well as the vote of the ZBA on such motions. If a roll call vote is taken, the record shall show the "yes" and "no" votes. However, if all members vote "yes" or "no", the minutes may then reflect motion carried or defeated by unanimous vote.

9.2 **Voting.** Except as provided herein, whenever a question is put by the Chairperson, every ZBA member present shall vote on the question. If a member has a conflict of interest, such conflict of interest shall be fully stated on the record. If a question exists whether the circumstances actually present a conflict of interest, the ZBA may, by majority vote of the members present and voting (without the vote of the member with the alleged conflict of interest), adjourn the case to a specific time, date, and place in order to obtain a written opinion from the county's civil counsel on the conflict of interest question. Once the conflict of interest is declared or confirmed, the ZBA member with the conflict of interest shall abstain from participating and voting in the case.

9.3 **Requests for Remarks to be Included.** Any ZBA member may request to have his or her comments printed as part of the minutes. If there are no objections by any ZBA member, the comments may be included. If there is an objection to including the requested comments in the minutes, the ZBA shall decide the matter by a majority vote of the ZBA members present.

9.4 **Public Access to Meeting Records.** The Secretary/Recording Secretary or his/her designee shall make available to the public the minutes of official meetings in accordance with the Freedom of Information Act. Minutes prepared by the Secretary/Recording Secretary or his/her designee but not approved by the ZBA shall be available for public inspection not more than eight (8) business days following the meeting. Minutes approved by the ZBA shall be available within five (5) business days after the meeting at which they were approved. The Secretary/Recording Secretary or his/her designee shall promptly mail copies of minutes to persons who have subscribed and paid the required fee as determined by the Cheboygan County Board of Commissioners.

10. **EX PARTE COMMUNICATION.** The ZBA desires to conduct all administrative proceedings fairly, to create a record that includes all of the evidence upon which its decisions are made, and to prevent the appearance of undue influence on its decisions. Therefore, for purposes of these Rules of Procedure, ex parte communication shall mean any oral or written communication which is made to or by a ZBA member related to a particular administrative proceeding pending before, or to be submitted to, the ZBA and which is made outside of the public hearing(s) related to that administrative proceeding. If any such ex parte communication is received or made by a ZBA member, then that member shall disclose the nature of the ex parte communication at the ZBA public hearing related to that administrative proceeding.

11. **AMENDMENTS.** These Rules of Procedure may be added to, amended or repealed in whole or in part. Proposed changes to these Rules of Procedure must be submitted in writing to the regular members of the ZBA at least one (1) month in advance of the meeting at which the proposed changes will be considered. A majority vote of the entire regular ZBA members shall be required to amend these Rules of Procedure.

12. **SEVERABILITY.** If any section, provision or clause of these Rules of Procedure or the application thereof to any person or circumstance shall be invalid, such invalidity shall not affect any remaining portion or application of these Rules of Procedure, which can be given effect without the invalid portion, or application.

These Rules of Procedure were adopted by the Cheboygan County Zoning Board of Appeals on _____, 2019.

CHEBOYGAN COUNTY
ZONING BOARD OF APPEALS

By: _____

Charles Freese

Its: Chairperson

By: _____

John Thompson

Its: Secretary